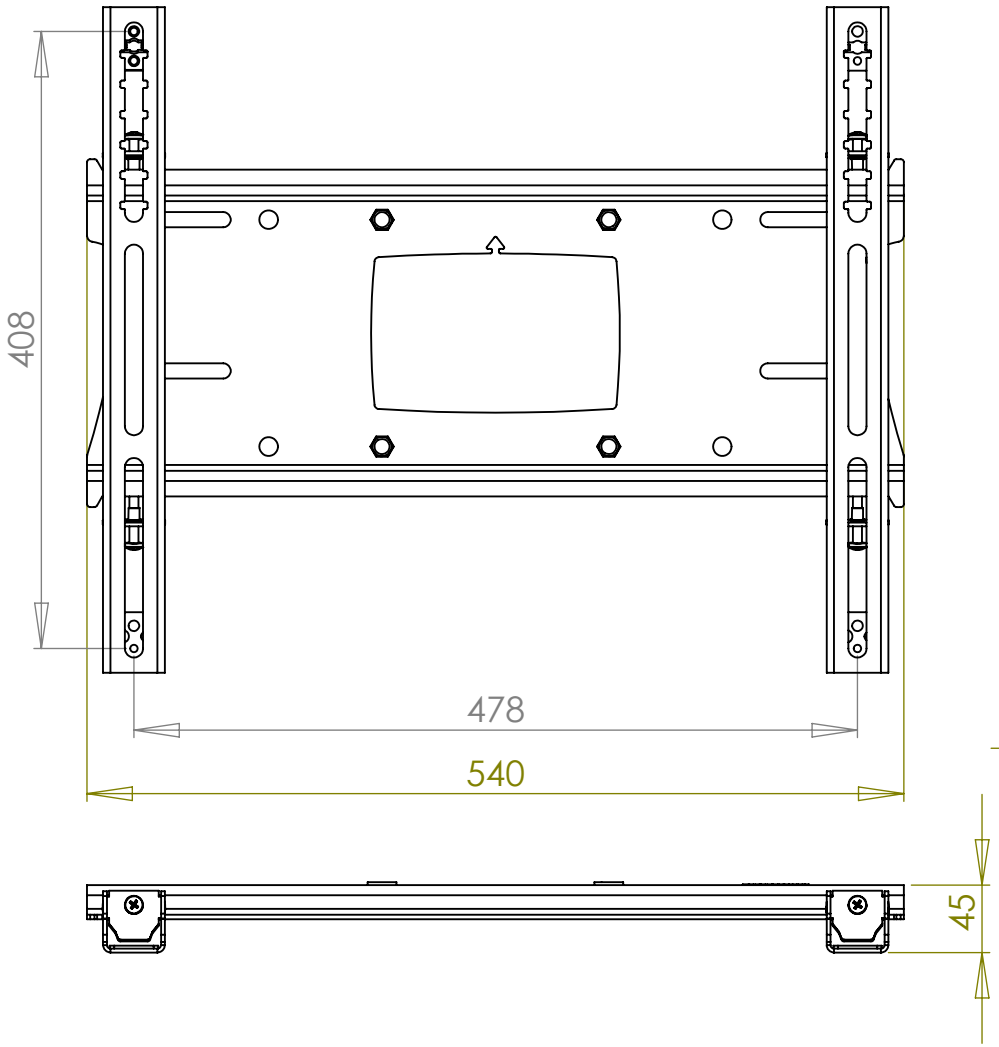

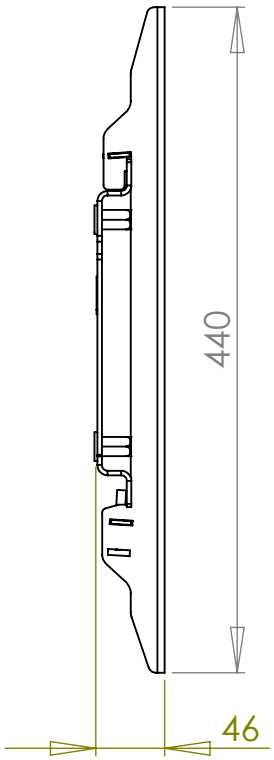

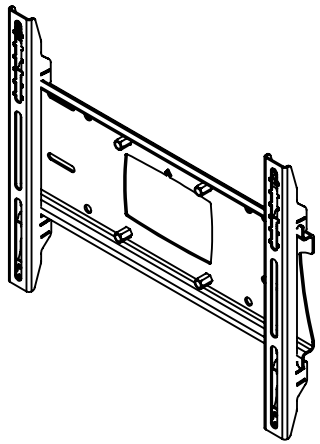

Description	PZX3 Pozimount Type 3 Non-Tilting		
UNLESS OTHERWISE SPECIFIED: DIMENSIONS ARE IN MILLIMETERS SURFACE FINISH: Powder Coated	Saved Date: 28 January 2022 Created Date: 28 January 2022 Bend Tool:	DRW - REV REV - H-354	See Below - Special Notes
Created By System Administrator. Unicol Engineering Green Road Oxford OX3 8EU	Material: Gauge:		Part Number & Part Revision Ass--20001489 REV - H-354
	WEIGHT: 4.08 Kg		SCALE:1:5 DO NOT SCALE DRAWING SHEET 1 OF 1