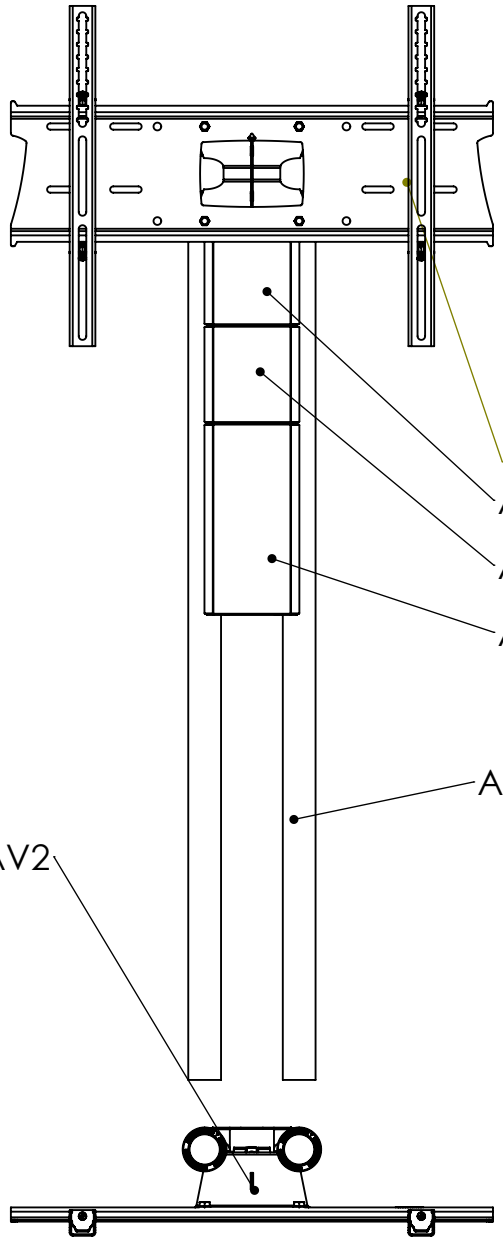

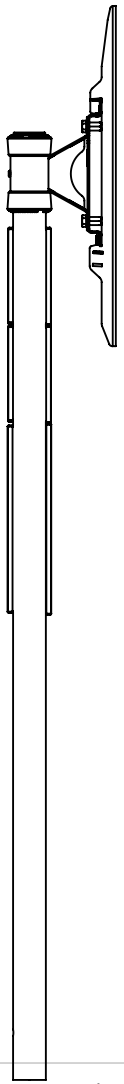

Description	MK11 Avecta Cabinet Mast With PZX1

UNLESS OTHERWISE SPECIFIED:
DIMENSIONS ARE IN MILLIMETERS

SURFACE FINISH: Powder Coated

DRAWN Ricky Clark

Unicol Engineering
Green Road
Oxford OX3 8EU

Mod Date 23/08/2021

Drawn Date: 12/02/2010

Material

Gauge

REVISION A-007

Bend & Machine Number

DWG NO. Ass--20008477

A4

WEIGHT: 18.6218.62 Kg

SCALE:1:12 DO NOT SCALE DRAWING SHEET 1 OF 1

Bend Tool